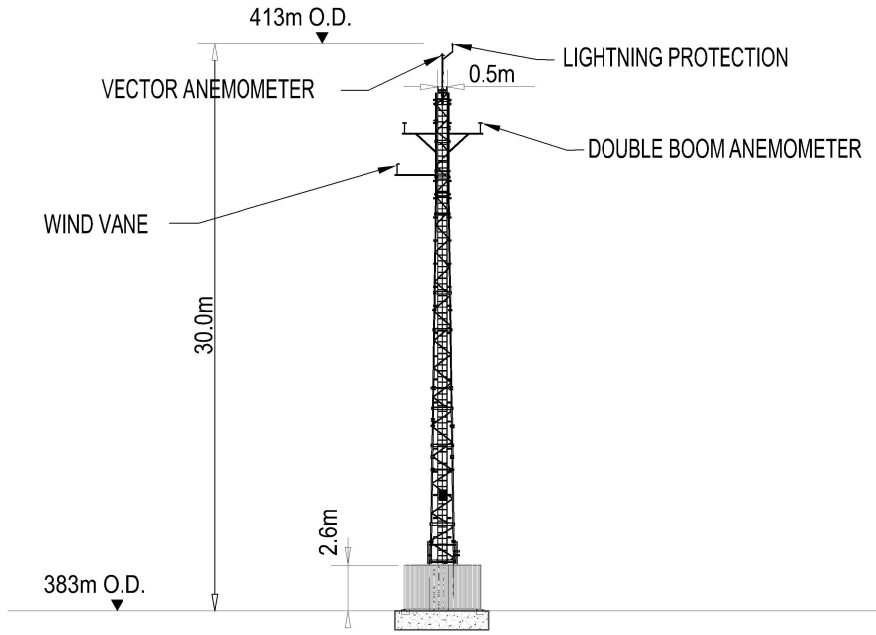

ELEVATION OF METEOROLOGICAL MAST
Scale 1:200

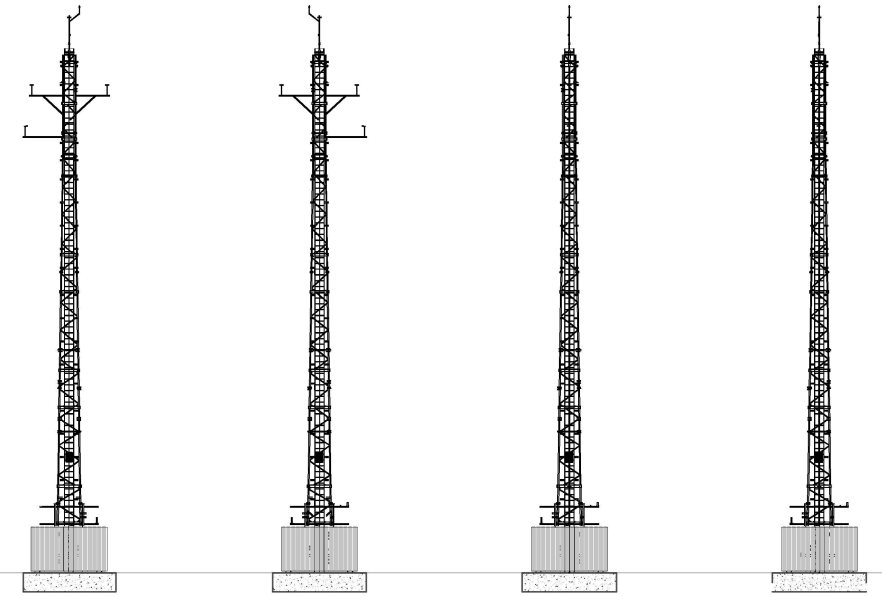

NORTH ELEVATION
Scale 1:200

SOUTH ELEVATION
Scale 1:200

EAST ELEVATION
Scale 1:200

WEST ELEVATION
Scale 1:200

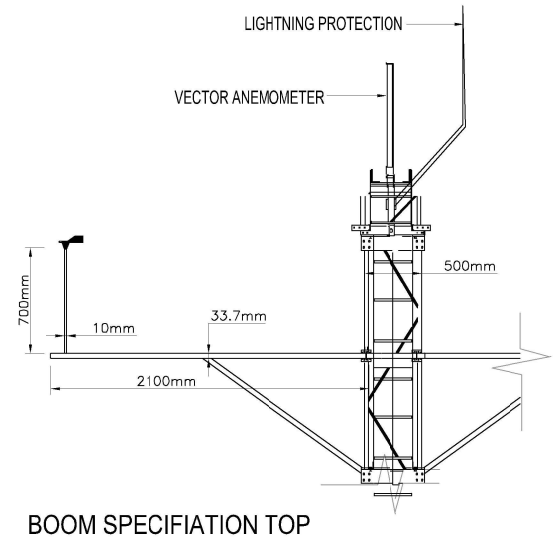

BOOM SPECIFIATION TOP
SCALE 1:20

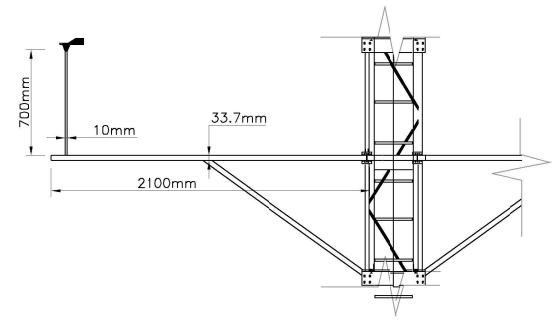

BOOM SPECIFIATION DOUBLE BOOM ANEMOMETER
SCALE 1:20

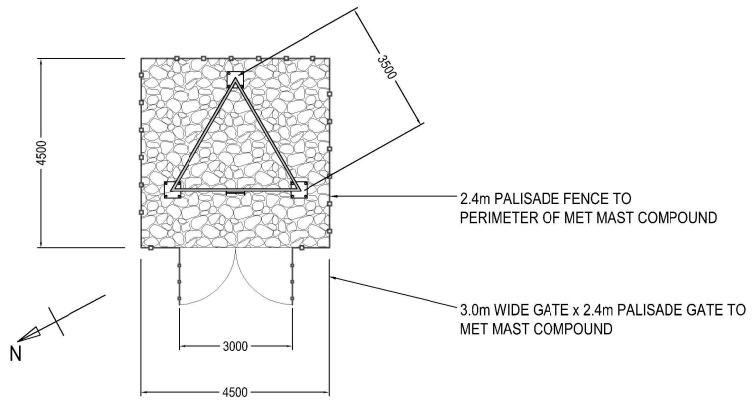

PLAN OF METOROLOGICAL MAST BASE
Scale 1:100

PALISADE FENCING SPEC:
Fence Post : 102 x 44 RSJ Nom Ctr's
: 2.75m Pales : Cold Formed 3.5mm
Thk Triple Pointed & Splayed @ Top
Pales @152 Ctr's Rails: 50x50x6
Foundation: 300 Sq x 800 dp
1/3 Anti-Sag Supports to btm rail

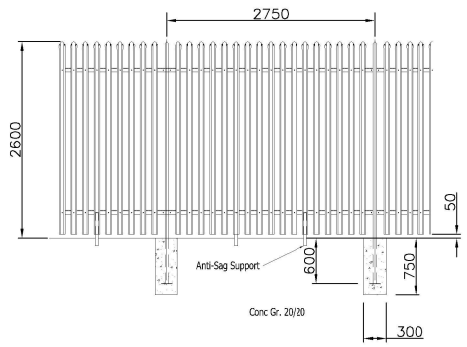

Pale Profile

PALISADE FENCING DETAIL (1:50)

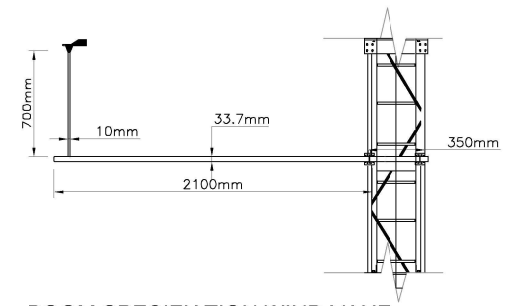

BOOM SPECIFIATION WIND VANE
SCALE 1:20

Palisade Gate Spec :
Gate Post : RSJ, UB or UC Hanging
Stile Closing Stile Top / Bottom Rail
Triangular Corner Gussets Sliding
Locking Bar Slam Plates 6mm Thk
Drop Bolts & Sockets Corrugated
pales
} RHS / SHS

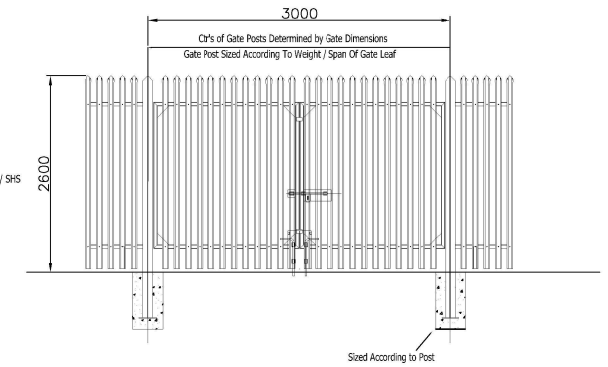

PALISADE GATE DETAIL (1:50)

THIS DRAWING IS FOR PLANNING PURPOSES ONLY.
IT IS NOT TO BE USED AS A CONSTRUCTION DRAWING.

SCOTTISHPOWER RENEWABLES

ScottishPower Renewables
320 St Vincent Street
Glasgow
G2 5AD

Email: info@scottishpowerrenewables.com
Web: www.scottishpowerrenewables.com

Notes
1. This drawing is theproperty of ScottishPower Renewables UK Ltd. It is a confidential document and must not becopied, used, or its contents divulged without prior written consent.
2. Scale AS NOTED @ A3

Rev.	Date	By	Amendments

Project: BARNESMORE WINDFARM REPOWERING

Title: INDICATIVE METROLOGICAL MAST DETAILS
FIGURE 2.4

Issue Details			
Designed: JOD	Information		
Drawn: A.McC	Approval	X	
Checked: S.M	Tender		
Approved: DK	Construction		
Scale: AS NOTED	Record		

Office Use Only
Drawing Number: 5952-1000-1003
Date: 19/10/19
Rev.